T035SPR940ELDB | RAY 75
Professional adjustable LED projector

0.53 IP20

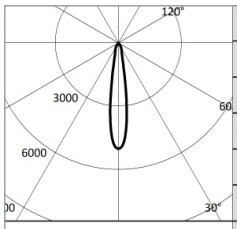

		4000K		H(m)	D(m)	Emax(lx)
		Ra90			17°	
		Fixture Power	25W	1	0.30	14212
		Source Flux	2833lm	2	0.59	3553
		Fixture Flux	2181lm	3	0.89	1579
		Efficacy	88lm/W	4	1.19	888
TS989	Imax=5017cd/klm	Imax	14212cd	5	1.48	568

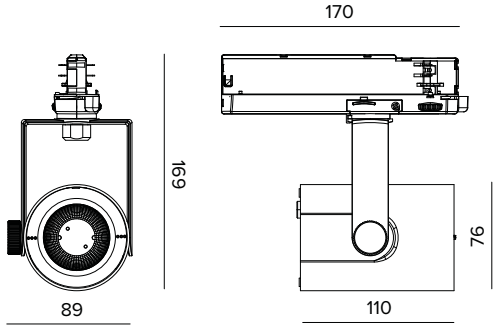

The figures on the drawing are expressed in mm.

SOURCE

High efficiency Chip on Board LED Ra90. Ra97 on request.
Energy efficiency class: E
Nominal power: 21W
Nominal flux: 2833lm
Colour rendering index: 90
Rf: 90
Rg: 98
CCT nominal: 4000K
Lifetime (L80/B10): >50000h tq +25°C

ILLUMINOTECHNICAL CHARACTERISTICS

Reflector with ellipsoidal facets in reflective anodised aluminium. Interchangeable reflectors available as accessories.
Optic: REFLECTOR
Beam angles: SP
Optical efficiency: 77%
Fixture flux: 2181lm
Luminous efficacy: 88lm/W
Photobiological safety: Compliant with RG1 low risk group

MECHANICAL CHARACTERISTICS

Painted die-cast aluminium body. Black painted polycarbonate front ring. Adjustable from 0° to -90° on the vertical plane and 359° on the horizontal plane. Mechanical beam locking system on the vertical plane and friction beam locking system on the horizontal plane. The centre of gravity always remains in axis with the track regardless of the aiming.
Colour and finish: Deep black
Dimensions: 75
Weight: 0.53Kg
Degree of protection: IP20

ELECTRICAL CHARACTERISTICS

ON-OFF electronic driver integrated into the track adapter.
Fixture Power: 25W
Power supply: 220-240Vac 50/60Hz
Insulation Class: CLASS 2
Type of driver / Control: ON-OFF
Driver included: YES
Class F: YES
Ambient temperature: 0°C / +25°C

INSTALLATION

Electrified track mounting. Optical accessories that can be installed with a support ring are available.

NOTES

110-277Vac version available on request.

WARRANTY

5 years.

WARNING

Luminaire designed for disposal/recycling at end-of-life. Replaceable (LED only) light source by a professional. Replaceable control gear by a professional.

Due to the technological evolution of the electronic components, the data provided may be updated, and as such, confirmation must be requested during the order process.
Luminous flux and power supply have +/-10% tolerances with respect to the indicated value. tq +25°C (CIE 121).

We reserve the right to make technical changes.

Targetti Sankey S.r.l.
Via Pratese, 164
50145 Firenze - Italy
Tel: +39 055 37911
targetti.com
targetti@targetti.com

CCIAA Firenze
Share Capital:
€ 500.000,00
VAT N. (IT):
01537660480
R.E.A: FI-275656

TARGETTI

T035SPR940ELDB | RAY 75
Professional adjustable LED projector

Accessories

Optic

Ø mm	Optic	Code
52	SP 17°	**A056SPR**
52	FL 31°	**A056FLR**
52	MWFL 48°	**A056MWR**

Interchangeable anodised reflective aluminium reflectors.
Available in Spot, Flood and Medium Wide Flood beams.

Bracket

Colour	Code
○	**A058PW**
●	**A058DB**

Rigid support bracket for projectors with Eurostandard Plus track attachment.
For compatibility and use please refer to the assembly instructions for the projectors.
For installation of Ray 75 projectors on wall vertical tracks.

Due to the technological evolution of the electronic components, the data provided may be updated, and as such, confirmation must be requested during the order process.
Luminous flux and power supply have +/-10% tolerances with respect to the indicated value. tq +25°C (CIE 121).

We reserve the right to make technical changes.

Targetti Sankey S.r.l.
Via Pratese, 164
50145 Firenze - Italy
Tel: +39 055 37911
targetti.com
targetti@targetti.com

CCIAA Firenze
Share Capital:
€ 500.000,00
VAT N. (IT):
01537660480
R.E.A: FI-275656

TARGETTI